MURR ELEKTRONIK
stay connected

MCS Power supply 3-phase, primary switched IN: 340-460VAC OUT: 24-28V/20ADC

INPUT: 3 × 340...460 V AC
OUTPUT: 24...28 V DC
Current: 20 A

Image

- 3-phase
- stable output voltage, (short-circuit and overload protected)
- Protection IP20

Vicarious picture

Input	
Input voltage	3 × 340...460 V AC
Input current	3 × 1.4 A
Inrush current after 1 ms	max. 25 A
External fuse	max. 3 × 6 A
Frequency	50/60 Hz
Output	
Output voltage	24 V DC (SELV), ±1 %; 24...28 V adjustable
Output current	20 A (+60 °C); 20...24 A (+40 °C)
Mains failure bridging time	min. 10 ms (400 V AC)
Ripple	max. 20 mV rms
Short-circuit and overload protection	yes
Spikes	max. 100 mV p-p
LED display	LED (green) for output voltage
Selectable switch-off mode	front sided plug link (automatic re-start or definite shut-off)
Parallel usage/serial usage	yes/yes
General data	
Standards	(EN 60950-1), (EN 61204-3), (EN 55011 A)
Temperature range	0...+60 °C (storage temperature -25...+85 °C)
Mounting method	DIN-rail mountable TH35 (EN 60715)
Efficiency	90 %
Relative humidity	30...90 %, no condensation
Dimensions H × W × D	170 x 84 x 201 mm
Commercial data	
Net weight	2420
Weight unit	Gram
Basic unit	pc.
Customs tariff number	85044090
Unit (piece)	1
Minimum order quantity (piece)	1

All data on this data sheet was compiled carefully.
Liability regarding correctness, completeness, and actuality is limited to gross negligence. Created: 12/13

MURR ELEKTRONIK
stay connected

Circuit diagram

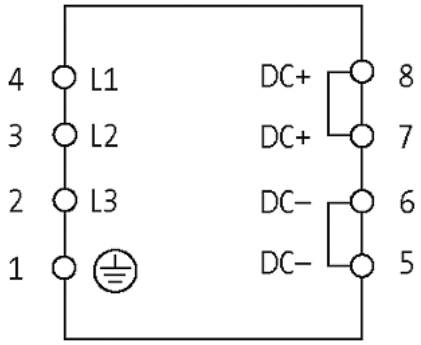

Dimension drawing

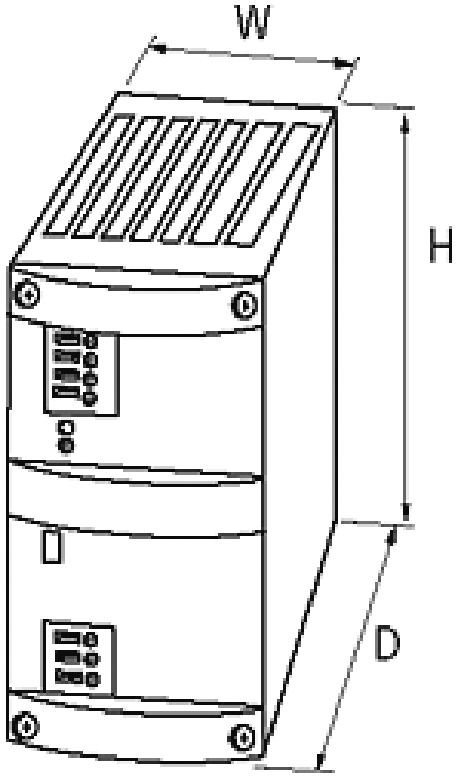

All data on this data sheet was compiled carefully.
Liability regarding correctness, completeness, and actuality is limited to gross negligence. Created: 12/13